All capacito

3. The parts indicated with

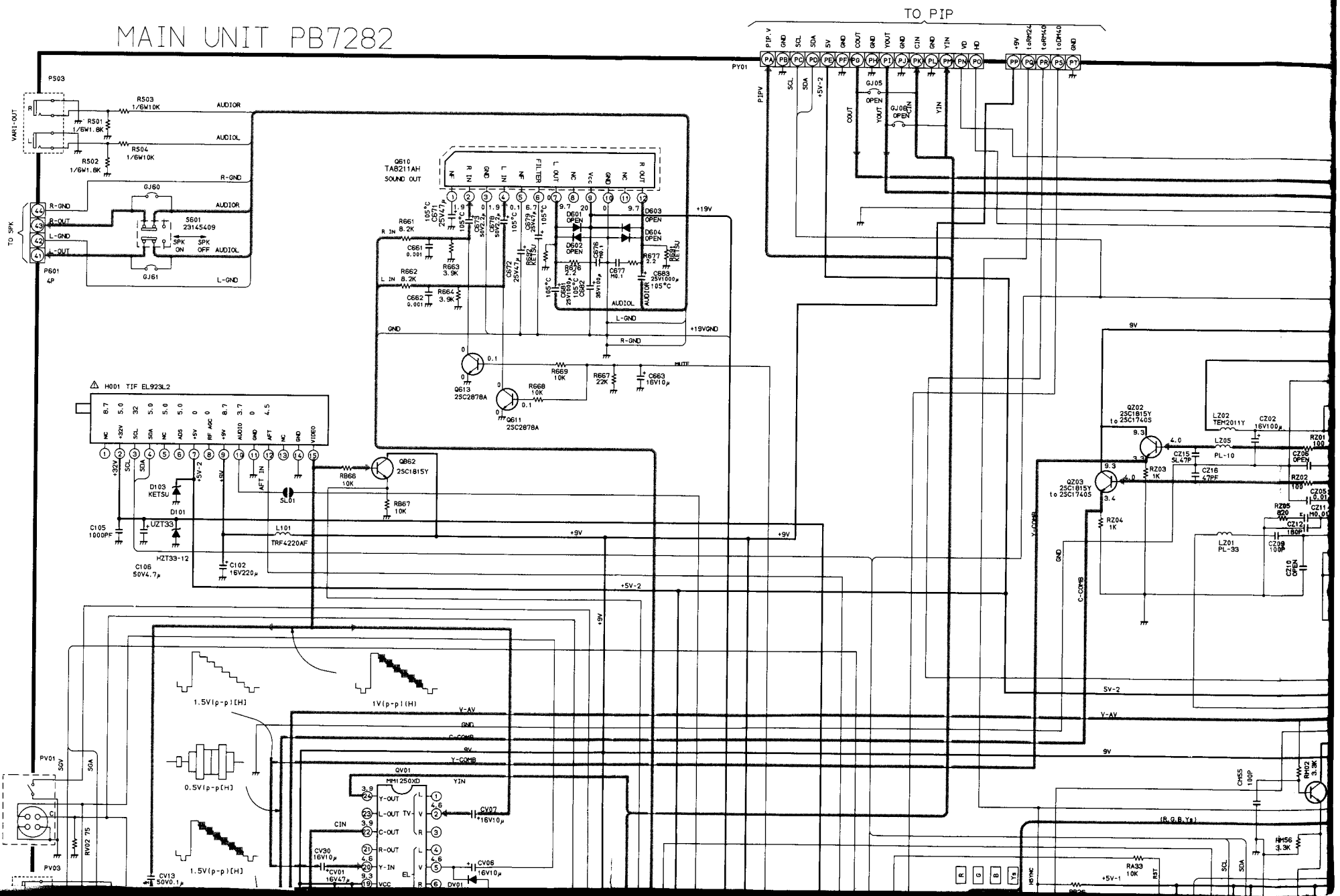

YOUT PIP PB7085A

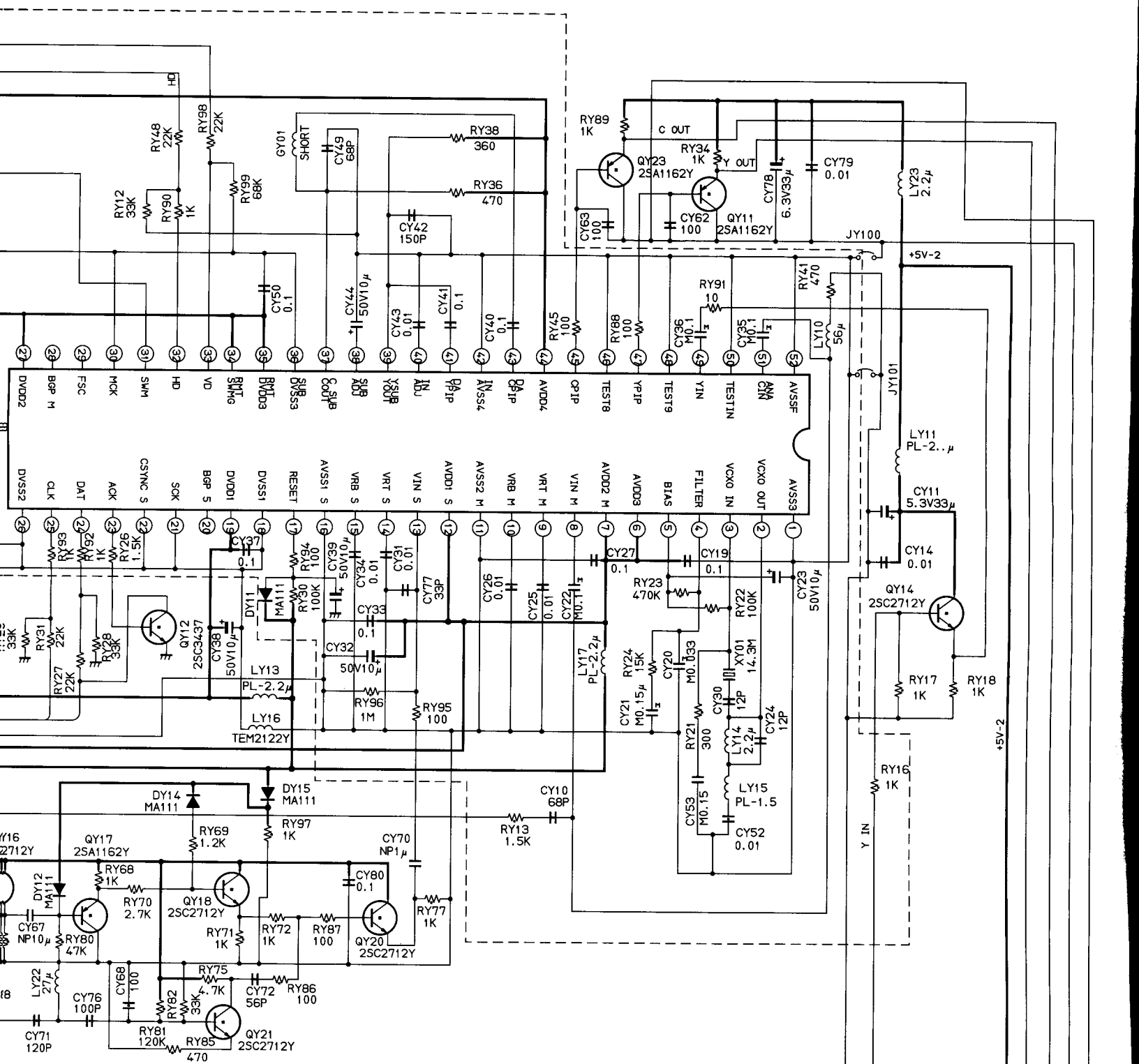

V-CHIP CIRCUIT IS OPEN PARTS(QM,DM,LM,CM,RM)

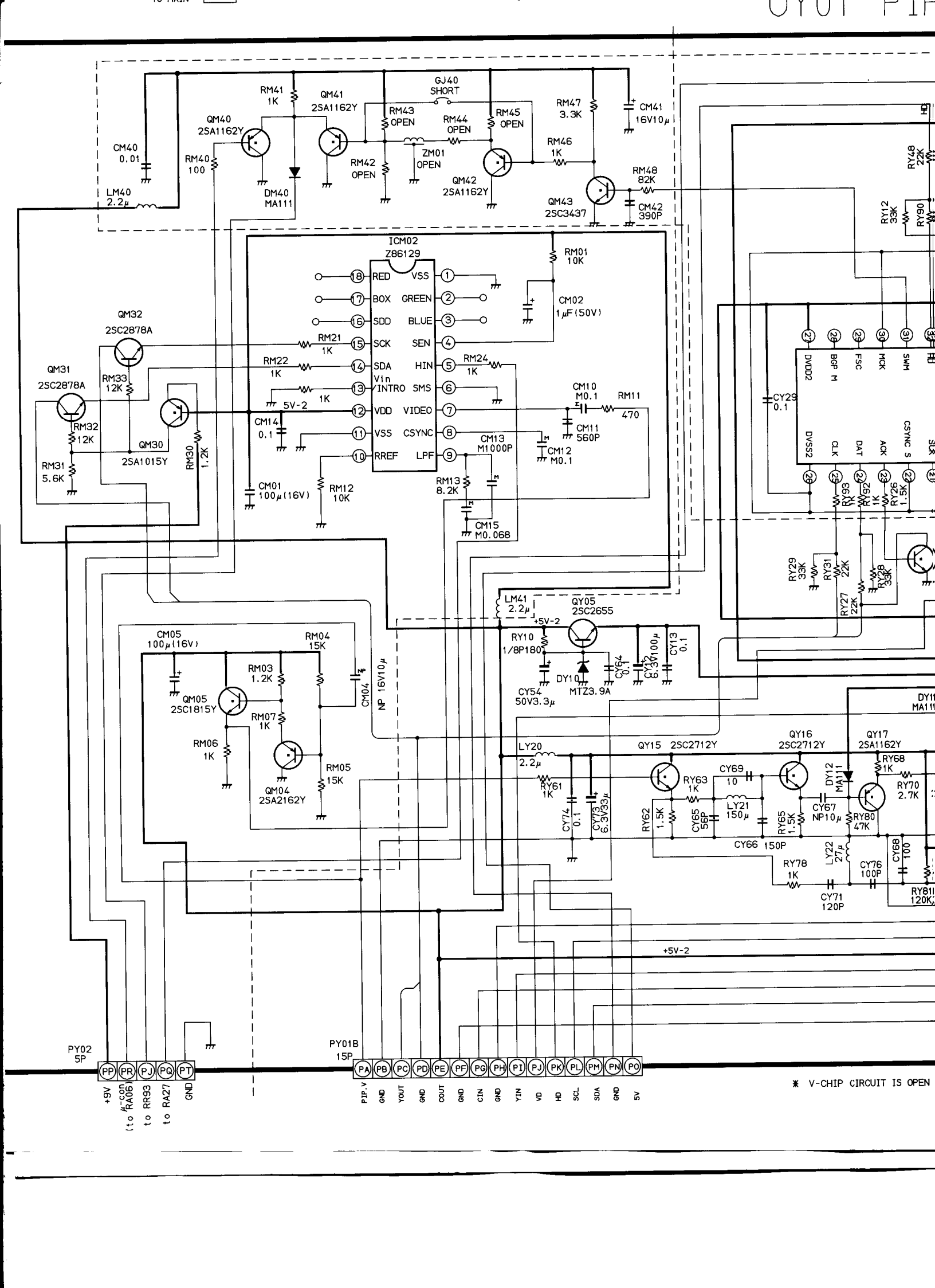
ICM02
Z86129
RED
BOX
SDD
SCK
SDA
Vin
INTRO
VDD
VSS
RREF
VSS
GREEN
BLUE
SEN
HIN
SMS
VIDEO
CSYNC
LPF
QM30
2SA1015Y
QM31
2SC2878A
QM32
2SC2878A
QM40
2SA1162Y
QM41
2SA1162Y
QM42
2SA1162Y
QM43
2SC3437
QM04
2SA2162Y
QM05
2SC1815Y
QY05
2SC2655
QY15 2SC2712Y
QY16
2SC2712Y
QY17
2SA1162Y
DM40
MA111
DY10
MTZ3.9A
GJ40
SHORT
ZM01
OPEN
LM40
2.2μ
LM41
2.2μ
LY20
2.2μ
CM40
0.01
CM41
16V10μ
CM42
390P
CM01
100μ(16V)
CM02
1μF(50V)
CM04
NP 16V10μ
CM05
100μ(16V)
CM10
M0.1
CM11
560P
CM12
M0.1
CM13
M1000P
CM14
0.1
CM15
M0.068
CY29
0.1
CY54
50V3.3μ
CY64
0.1
CY72
6.3V100μ
CY13
0.1
CY74
0.1
CY73
6.3V33μ
CY69
10
CY65
56P
CY66
150P
CY67
NP10μ
CY71
120P
CY76
100P
CY68
100
RM01
10K
RM04
15K
RM05
15K
RM06
1K
RM07
1K
RM03
1.2K
RM11
470
RM12
10K
RM13
8.2K
RM21
1K
RM22
1K
RM24
1K
RM30
1.2K
RM31
5.6K
RM32
12K
RM33
12K
RM40
100
RM41
1K
RM42
OPEN
RM43
OPEN
RM44
OPEN
RM45
OPEN
RM46
1K
RM47
3.3K
RM48
82K
RY10
1/8P180
RY12
33K
RY48
22K
RY90
RY93
1K
RY92
1K
RY26
1.5K
RY29
33K
RY31
22K
RY28
33K
RY27
22K
RY61
1K
RY62
1.5K
RY63
1K
RY65
1.5K
RY68
1K
RY70
2.7K
RY80
47K
RY78
1K
RY81
120K
LY21
150μ
LY22
27μ
DY12
MA111
+5V-2
5V-2
PY02
5P
PP
PR
PJ
PQ
PT
+9V
μ-con
(to RA06)
to RR93
to RA27
GND
PY01B
15P
PA
PB
PC
PD
PE
PF
PG
PH
PI
PJ
PK
PL
PM
PN
PO
PIP.V
GND
YOUT
GND
COUT
GND
CIN
GND
YIN
VD
HD
SCL
SDA
GND
5V
DVDD2
BGP
FSC
MCK
SWM
DVSS2
CLK
DAT
ACK
CSYNC S
SCK
✱ V-CHIP CIRCUIT IS OPEN

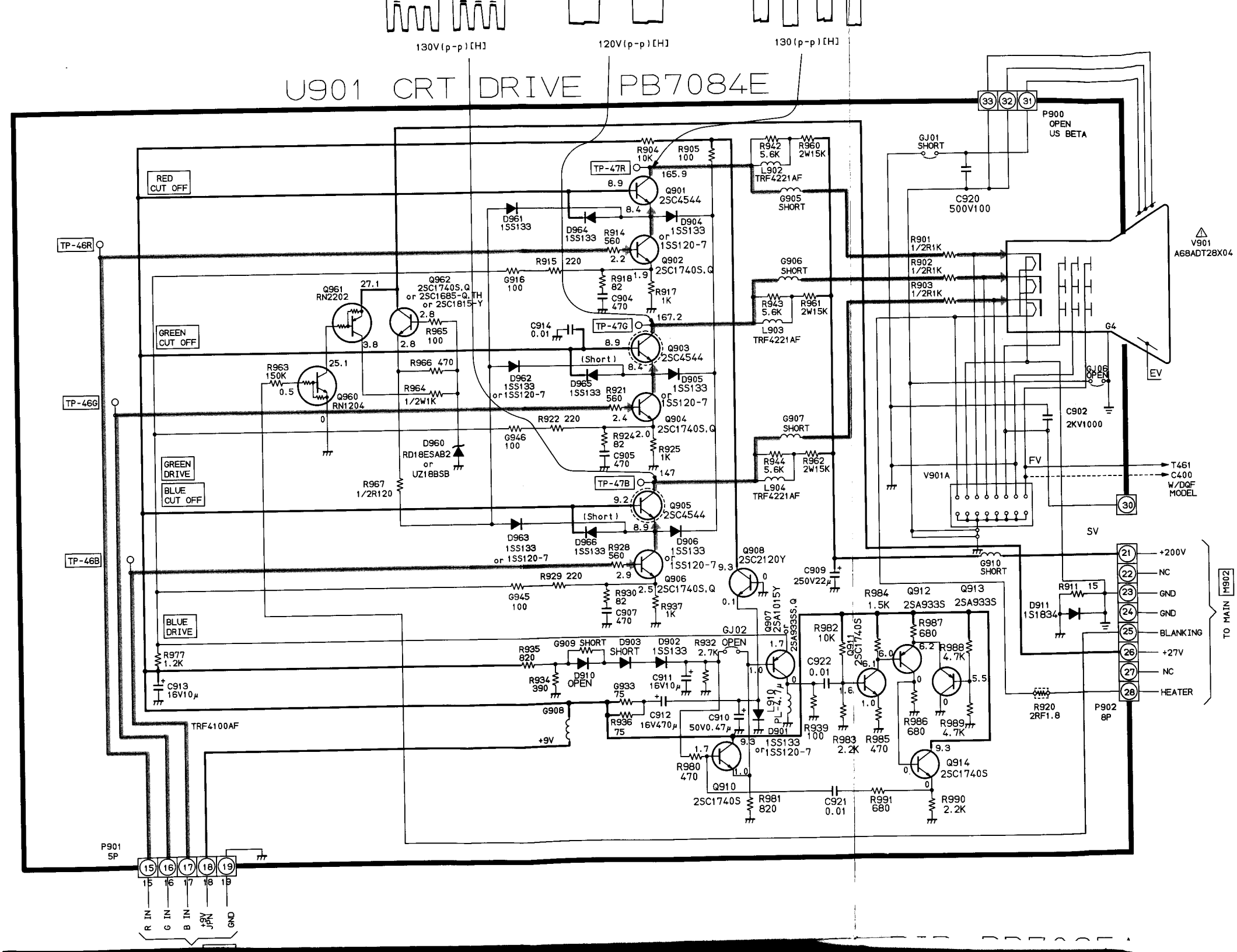
130V(p-p)[H]
120V(p-p)[H]
130(p-p)[H]
U901 CRT DRIVE PB7084E
RED CUT OFF
GREEN CUT OFF
GREEN DRIVE
BLUE CUT OFF
BLUE DRIVE
TP-46R
TP-46G
TP-46B
TP-47R
TP-47G
TP-47B
Q901 2SC4544
Q902 2SC1740S,Q
Q903 2SC4544
Q904 2SC1740S,Q
Q905 2SC4544
Q906 2SC1740S,Q
Q907 2SA1015Y
Q908 2SC2120Y
Q909 2SA933S,Q
Q910 2SC1740S
Q911 2SC1740S
Q912 2SA933S
Q913 2SA933S
Q914 2SC1740S
Q960 RN1204
Q961 RN2202
Q962 2SC1740S,Q or 2SC1685-Q,TH or 2SC1815-Y
D901 1SS133 or 1SS120-7
D902 1SS133
D903 SHORT
D904 1SS133 or 1SS120-7
D905 1SS133 or 1SS120-7
D906 1SS133 or 1SS120-7
D910 OPEN
D911 1S1834
D960 RD18ESAB2 or UZ18BSB
D961 1SS133
D962 1SS133 or 1SS120-7
D963 1SS133 or 1SS120-7
D964 1SS133
D965 1SS133
D966 1SS133
TRF4100AF
L902 TRF4221AF
L903 TRF4221AF
L904 TRF4221AF
L910 4.7μ
G905 SHORT
G906 SHORT
G907 SHORT
G910 SHORT
GJ01 SHORT
GJ02
GJ06 OPEN
P900 OPEN US BETA
P901 5P
P902 8P
V901 A68ADT28X04
V901A
C902 2KV1000
C909 250V22μ
C910 50V0.47μ
C911 16V10μ
C912 16V470μ
C913 16V10μ
C920 500V100
C921 0.01
C922 0.01
R901 1/2R1K
R902 1/2R1K
R903 1/2R1K
R904 10K
R905 100
R911 15
R914 560
R915 220
R916 100
R917 1K
R918 82
R920 2RF1.8
R921 560
R922 220
R924 2.0
R925 1K
R928 560
R929 220
R930 82
R932 OPEN 2.7K
R933 75
R934 390
R935 820
R936 75
R937 1K
R939 100
R942 5.6K
R943 5.6K
R944 5.6K
R945 100
R946 100
R960 2W15K
R961 2W15K
R962 2W15K
R963 150K
R964 1/2W1K
R965 100
R966 470
R967 1/2R120
R977 1.2K
R980 470
R981 820
R982 10K
R983 2.2K
R984 1.5K
R985 470
R986 680
R987 680
R988 4.7K
R989 4.7K
R990 2.2K
R991 680
C904 470
C905 470
C907 470
EV
FV
SV
G4
T461
C400 W/DQF MODEL
+200V
NC
GND
GND
BLANKING
+27V
NC
HEATER
TO MAIN M902
R IN
G IN
B IN
+9V JPN
GND
+9V

DIFFERENCE LIST

PART NOMBER		CF27G50 CL29G50	CN27G90	
U902	MAIN UNIT	PB7282A	PB7282B	
T801	LINE FILTER	TRF3202K	TRF3202K	
		TRF3202	TRF3202	
C801	CAPACITOR	AC125V0.22μF	AC125V0.22μF	//
C802	CAPACITOR	AC125V0.082μF	AC125V0.082μF	//
GJ05	JUMPER WIRE	OPEN	OPEN	
GJ06	JUMPER WIRE	OPEN	OPEN	
UY01	PIP UNIT	USE	USE	

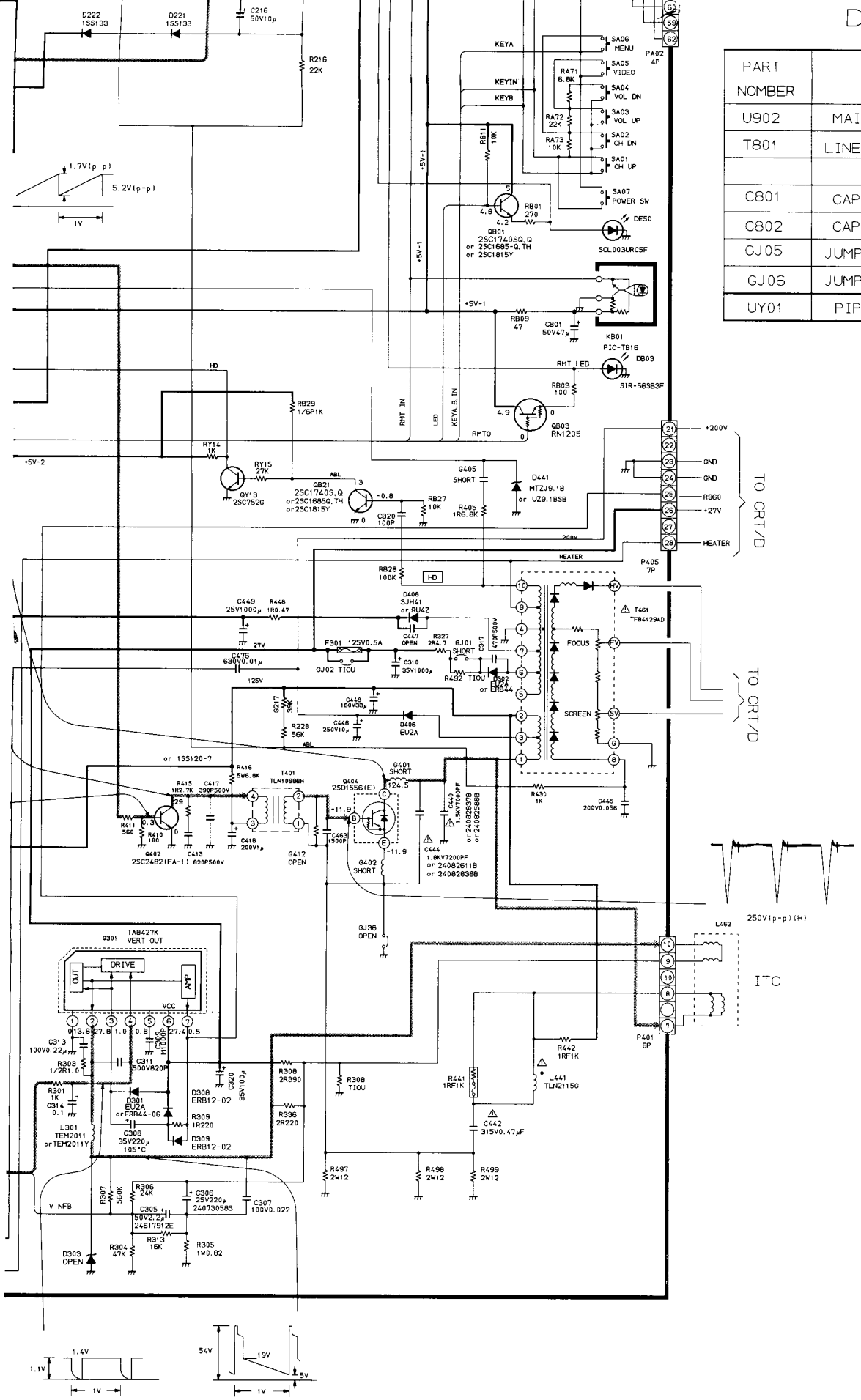

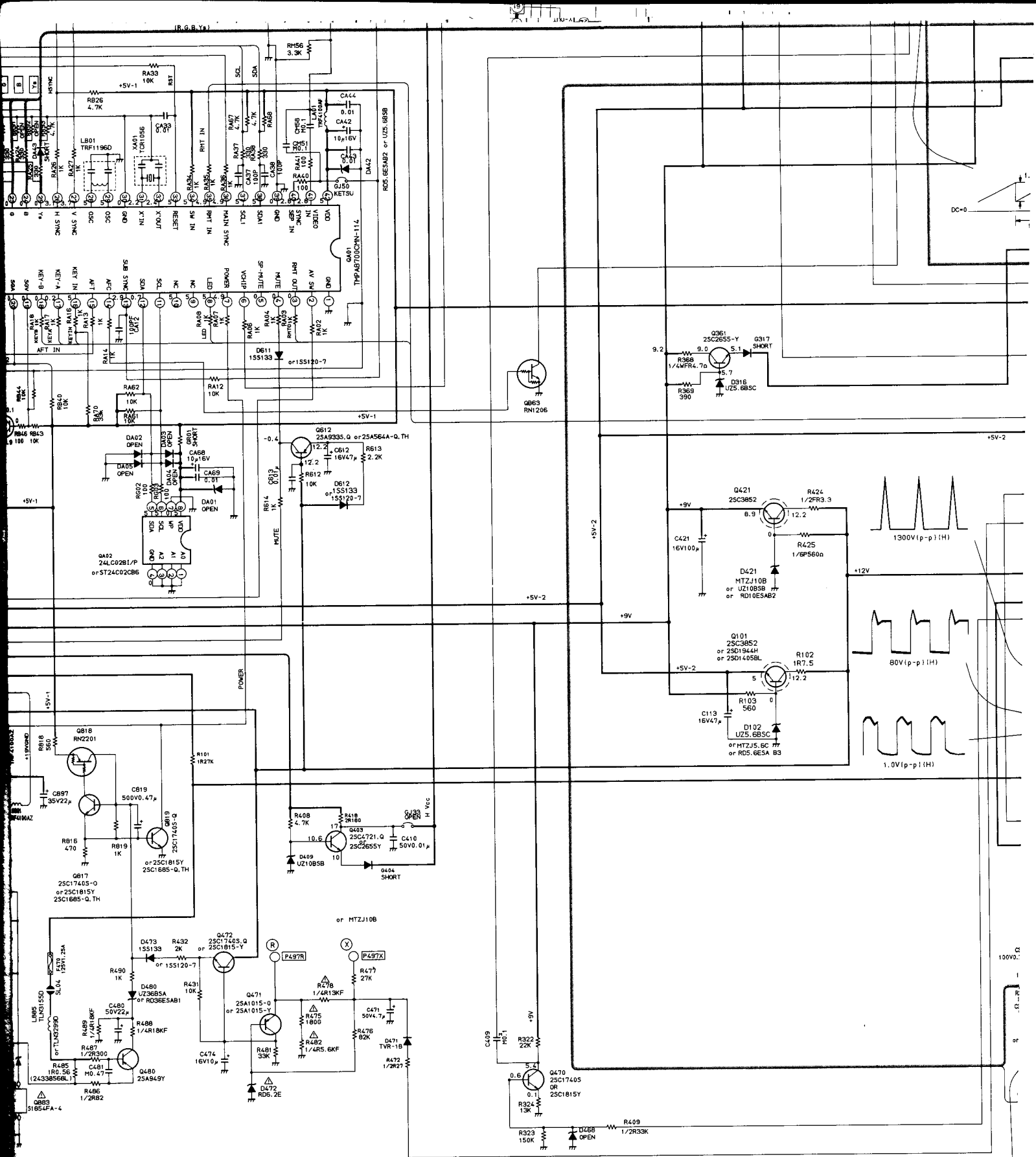

	R1	R2	R3
Q883	S1854(FA-4)	S1854(FA)	S1854(FA-1)
D882	UZ13BSA	UZ11BSA	UZ10BSB

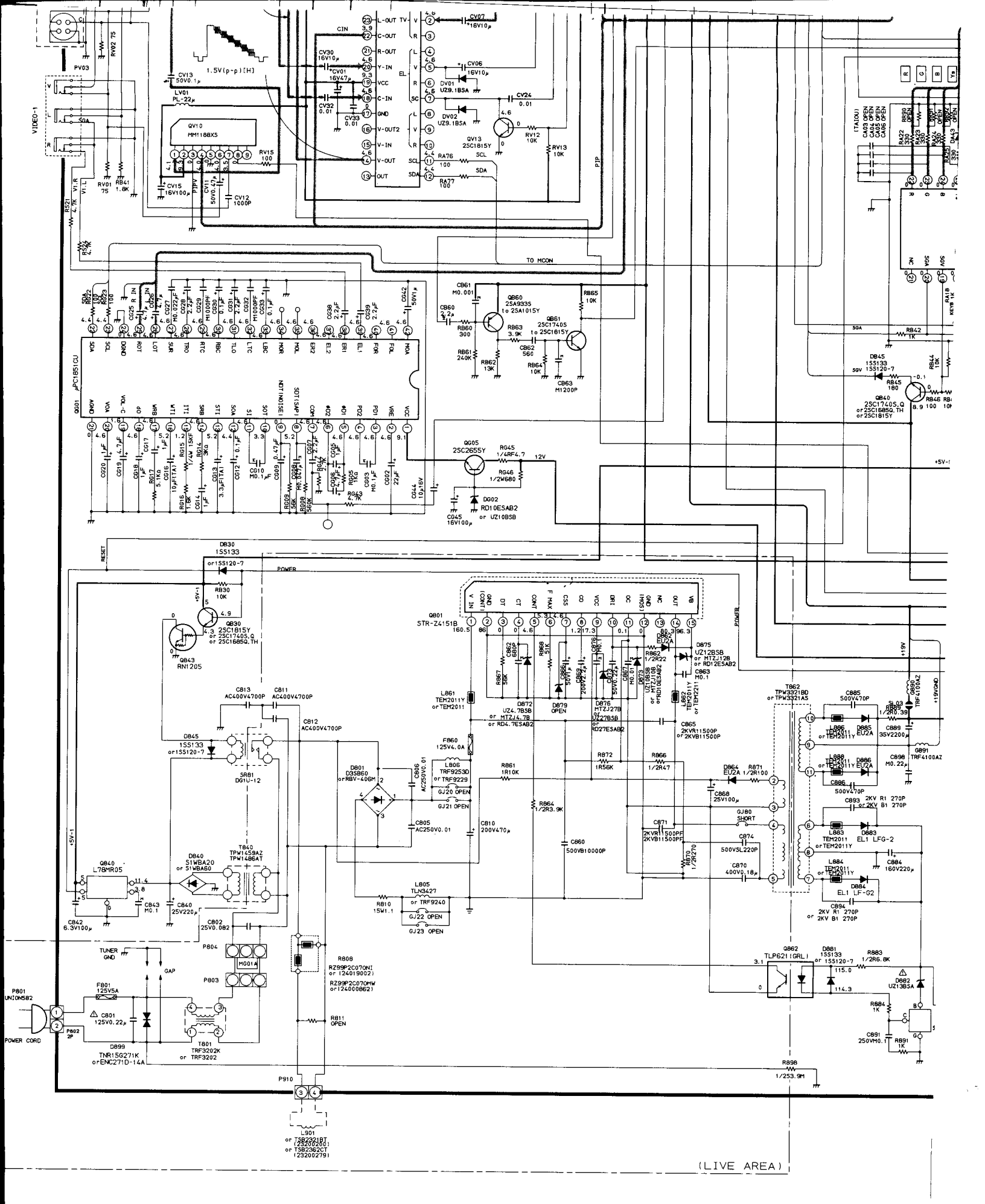

VIDEO-1
PV03
RV02 75
1.5V(p-p)[H]
CV13 50V0.1μ
LV01 PL-22μ
QV10 MM1188XS
RV15 100
CV15 16V100μ
CV12 1000P
CV11 50V0.47μ
RV01 75
RB41 1.8K
RS21 4.7K
CIN
CV30 16V10μ
CV01 16V47μ
CV32 0.01
CV33 0.01
L-OUT
C-OUT
R-OUT
Y-IN
VCC
C-IN
GND
V-OUT2
V-IN
V-OUT
OUT
CV07 16V10μ
CV06 16V10μ
DV01 UZ9.1BSA
DV02 UZ9.1BSA
CV24 0.01
QV13 2SC1815Y
RV12 10K
RV13 10K
RA76 100
RA77 100
PIP
TO MCON
QG01 μPC1851CU
QG05 2SC2655Y
RG45 1/4RF4.7
RG46 1/2W680
DG02 RD10ESAB2 or UZ10BSB
CG45 16V100μ
CG44 10μ16V
CG42 50V1μ
QB60 2SA933S to 2SA1015Y
QB61 2SC1740S to 2SC1815Y
CB61 M0.001
CB60 2.2μ
RB60 300
RB61 240K
RB62 13K
RB63 3.9K
CB62 560
RB64 10K
CB63 M1200P
RB65 10K
DB45 1SS133 or 1SS120-7
RB45 180
QB40 2SC1740S,Q or 2SC1685Q,TH or 2SC1815Y
RB46 100
RB42 1K
RB44 10K
RA18 KEYB 1K
RESET
DB30 1SS133 or 1SS120-7
RB30 10K
QB30 2SC1815Y or 2SC1740S,Q or 2SC1685Q,TH
QB43 RN1205
POWER
Q801 STR-Z4151B
DB72 UZ4.7BSB or MTZJ4.7B or RD4.7ESAB2
DB76 MTZJ27B or UZ27BSB or RD27ESAB2
DB75 UZ12BSB or MTZJ12B or RD12ESAB2
DB62 EU2A
DB73 UZ10BSB or MTZJ10B or RD10ESAB2
DB79 OPEN
LB61 TEM2011Y or TEM2011
LB62 TEM2011Y or TEM2211
CB65 2KVR11500P or 2KVB11500P
CB63 M0.1
CB62 680P
RB67 56K
RB68 51K
CB66 50V1μ
CB69 200V2.2μ
CB67 M0.01
CB73 50V0.22μ
CB72 M0.1
CB71 2KVR11500PF 2KVB11500PF
RB70 1/2R270
CB74 500VSL220P
CB70 400V0.18μ
GJ80 SHORT
CB68 25V100μ
DB64 EU2A
RB71 1/2R100
RB72 1R56K
RB66 1/2R47
RB61 1R10K
RB64 1/2R3.9K
CB60 500VB10000P
CB10 200V470μ
CB13 AC400V4700P
CB11 AC400V4700P
CB12 AC400V4700P
DB45 1SS133 or 1SS120-7
SR81 DG1U-12
FB60 125V4.0A
LB06 TRF9253D or TRF9229
GJ20 OPEN
GJ21 OPEN
CB06 AC250V0.01
CB05 AC250V0.01
DB01 D3SB60 or RBV-406M
LB05 TLN3427 or TRF9240
GJ22 OPEN
GJ23 OPEN
RB10 15W1.1
TB40 TPW1459AZ TPW1486AT
DB40 S1WBA20 or S1WBA60
QB40 L78MR05
CB43 M0.1
CB40 25V220μ
CB42 6.3V100μ
CB02 25V0.082
TUNER GND
GAP
P804
MG01A
P803
RB08 RZ99P2C070NI or (24019002)
RZ99P2C070MW or (24000862)
RB11 OPEN
P801 UNION582
POWER CORD
FB01 125V5A
CB01 125V0.22μ
DB99 TNR15G271K or ENC271D-14A
TB01 TRF3202K or TRF3202
P802 2P
P910
LB01 or TSB2321BT (23200200) or TSB2362CT (23200279)
TB62 TPW3321BD or TPW3321AS
CB85 500V470P
RB89 1/2R0.39
CB89 35V2200μ
GB90 TRF4100AZ
GB91 TRF4100AZ
CB98 M0.22μ
LB86 TEM2011 or TEM2011Y
DB85 EU2A
LB88 TEM2011 or TEM2011Y
DB86 EU2A
CB86 500V470P
CB93 2KV R1 270P or 2KV B1 270P
LB83 TEM2011 or TEM2011Y
DB83 EL1 LFG-2
LB84 TEM2011 or TEM2011Y
CB84 160V220μ
DB84 EL1 LF-G2
CB94 2KV R1 270P or 2KV B1 270P
QB62 TLP621(GRL)
DB81 1SS133 or 1SS120-7
RB83 1/2R6.8K
DB82 UZ13BSA
RB84 1K
CB91 250VM0.1
RB91 1K
RB98 1/253.9M
(LIVE AREA)

VIDEO-1
PV03
RV02 75
RV01 75
RB41 1.8K
RS21 4.7K
CV13 50V0.1μ
LV01 PL-22μ
QV10 MM1188XS
RV15 100
CV15 16V100μ
CV11 50V0.47μ
CV12 1000P
PIPV
1.5V(p-p)[H]
CIN
L-OUT
C-OUT
R-OUT
Y-IN
VCC
C-IN
GND
V-OUT2
V-IN
V-OUT
OUT
TV
EL
SC
SCL
SDA
CV30 16V10μ
CV01 16V47μ
CV32 0.01
CV33 0.01
CV07 16V10μ
CV06 16V10μ
DV01 UZ9.1BSA
DV02 UZ9.1BSA
CV24 0.01
QV13 2SC1815Y
RV12 10K
RV13 10K
RA76 100
RA77 100
PIP
TO MCON
μPC1851CU
QG01
SDA
SCL
DGND
ROT
LOT
SUR
TRO
RTC
RBC
TLO
LTC
LBC
MOR
MOL
ER2
EL2
ER1
EL1
FOR
FOL
MOA
AGND
VOA
VOL-C
dO
WRB
WTI
ITI
SRB
STI
SOA
S1
SOT
NOT(NOISE)
SOT(SAP)
COM
ΦD2
ΦD1
PD2
PD1
VRE
VCC
QG05 2SC2655Y
RG45 1/4RF4.7
RG46 1/2W680
12V
DG02 RD10ESAB2 or UZ10BSB
CG45 16V100μ
CG44 10μ16V
C861 M0.001
C860 2.2μ
RB60 300
RB61 240K
RB62 13K
QB60 2SA933S to 2SA1015Y
RB63 3.9K
C862 560
RB64 10K
CB63 M1200P
QB61 2SC1740S to 2SC1815Y
RB65 10K
RESET
DB30 1SS133 or 1SS120-7
RB30 10K
QB30 2SC1815Y or 2SC1740S.Q or 2SC1685Q.TH
QB43 RN1205
POWER
+5V-1
Q801 STR-Z4151B
V IN
GND (CONT)
DT
CT
CONT
F MAX
CSS
CO
VCC
DRI
OC
GND (MOS)
NC
OUT
VB
D862 EU2A
D875 UZ12BSB or MTZJ12B or RD12ESAB2
R862 1/2R22
C863 M0.1
L861 TEM2011Y or TEM2011
L862 TEM2011Y TEM2211
D872 UZ4.7BSB or MTZJ4.7B or RD4.7ESAB2
D879 OPEN
D876 MTZJ27B or UZ27BSB or RD27ESAB2
C865 2KVR11500P or 2KVB11500P
C813 AC400V4700P
C811 AC400V4700P
C812 AC400V4700P
D845 1SS133 or 1SS120-7
5R81 DG1U-12
F860 125V4.0A
D801 D3SB60 or RBV-406M
C806 AC250V0.01
L806 TRF9253D or TRF9229
GJ20 OPEN
GJ21 OPEN
R861 1R10K
R872 1R56K
R866 1/2R47
R864 1/2R3.9K
C860 500VB10000P
C805 AC250V0.01
C810 200V470μ
Q840 L78MR05
D840 S1WBA20 or S1WBA60
T840 TPW1459AZ TPW1486AT
C842 6.3V100μ
C843 M0.1
C840 25V220μ
C802 25V0.082
L805 TLN3427 or TRF9240
R810 15W1.1
GJ22 OPEN
GJ23 OPEN
P804
P803
MG01A
TUNER GND
GAP
R808 RZ99P2C070NI or (24019002) RZ99P2C070MW or (24008862)
R811 OPEN
P801 UNION582
F801 125V5A
C801 125V0.22μ
P802 2P
POWER CORD
D899 TNR15G271K or ENC271D-14A
T801 TRF3202K or TRF3202
P910
L901 or TSB2321BT (23200200) or TSB2362CT (23200279)
(LIVE AREA)
T862 TPW3321BD or TPW3321AS
D864 EU2A
R871 1/2R100
C868 25V100μ
GJ80 SHORT
C871 2KVR11500PF 2KVB11500PF
C874 500VSL220P
C870 400V0.18μ
R870 1/2R270
C885 500V470P
L886 TEM2011 or TEM2011Y
D885 EU2A
C889 35V2200μ
L888 TEM2011 TEM2011Y
D886 EU2A
C886 500V470P
C893 2KV R1 270P or 2KV B1 270P
L883 TEM2011 or TEM2011Y
D883 EL1 LFG-2
C884 160V220μ
L884 TEM2011 TEM2011Y
D884 EL1 LF-G2
C894 2KV R1 270P or 2KV B1 270P
SL03
R889 1/2R0.39
G891 TRF4100AZ
C896 M0.22μ
G890 TRF4100AZ
+19V
+19VGND
Q862 TLP621(GRL)
D881 1SS133 or 1SS120-7
R883 1/2R6.8K
D882 UZ13BSA
R884 1K
C891 250VM0.1
R891 1K
R898 1/2S3.9M
R G B Ys
RA22 330
RA23 330
RA24 330
RA18 1K
KEYB
SGA
SGV
RB42 1K
DB45 1SS133 1SS120-7
RB45 180
RB44 10K
QB40 2SC1740S.Q or 2SC1685Q.TH or 2SC1815Y
RB46
+5V-1

apacitors are ceramic 50V, unless otherwise noted as the following marks:
— Electolytic capacitor —||— Mylar capacitor
| with " ⚠ " have special characteristics, and should be replaced with identical parts only.

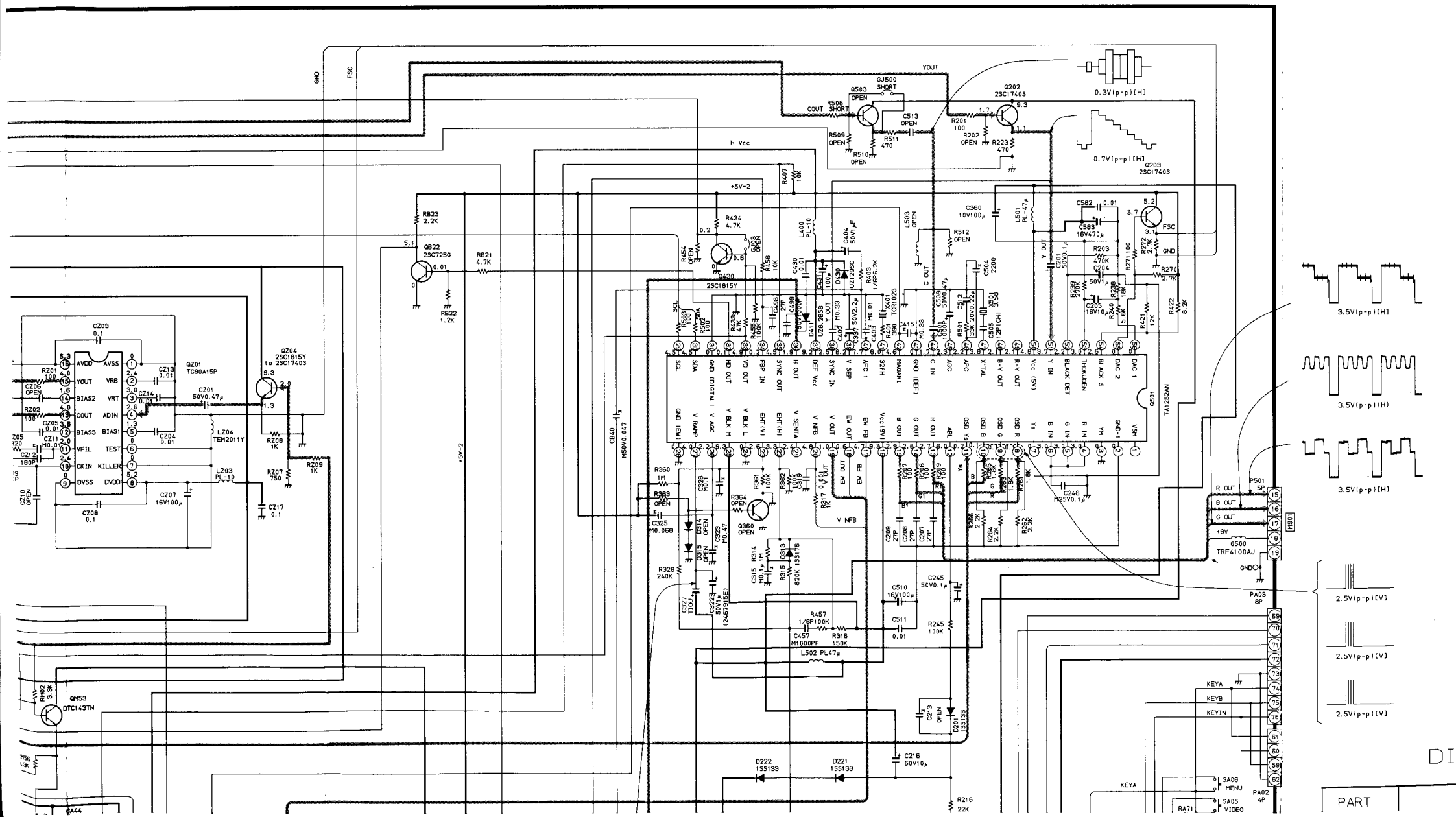

PART